Electronic Services - Hayward, Ca
M21170X

Beckman Industrial™

4½ Digit Handheld Multimeter

SERVICE MANUAL

Beckman Industrial™

4½ Digit
Handheld Multimeter

Service Manual

©1985 Beckman Industrial Corp.
A Subsidiary of Emerson Electric Co.

INSTRUMENTATION PRODUCTS DIVISION • BECKMAN INDUSTRIAL CORP. • BREA, CALIFORNIA 92621

MAY 1985

PRINTED IN U.S.A.

TABLE OF CONTENTS

SECTION	TITLE	PAGE
ONE	GENERAL INFORMATION	3
1.1	Introduction	3
1.2	Specifications	5
TWO	DETAILED FUNCTIONAL DESCRIPTION	11
2.1	General	11
2.2	Operating Features	11
THREE	SERVICING	16
3.1	General	16
3.2	Servicing Policy	16
3.3	After-warranty Repair or Exchange Service	17
3.4	Calibration Service	18
FOUR	CALIBRATION	19
4.1	Calibration Procedure	19
4.2	DC Calibration and AC Calibration	19
4.3	Maintenance	20
a.	Cleaning Case and Window	20
b.	Battery Replacement (Model 4410)	21
c.	Battery Replacement (HD140)	21
d.	Fuse Replacement (Model 4410)	21
e.	Fuse Replacement (HD140)	22
FIVE	TROUBLESHOOTING	23
5.1	Repair Guide	23
5.2	Function/Range Switch Contact Position Matrix	26
5.3	4½ Digit Meter - Schematic (Input Board)	27
5.4	4½ Digit Meter - Schematic (Display Board)	28
SIX	REPLACEMENT PARTS AND SUPPLIES	29
SEVEN	SERVICE CENTERS—U.S./CANADA	37

GENERAL INFORMATION

1.1 Introduction

Models 4410 and HD140 Digital Multimeters are completely portable, 4½-digit multimeters with liquid-crystal-display (LCD), designed for use by the person who demands a multimeter that is accurate, reliable and always ready for use. Equipped with five functions and 27 ranges, each test position on the multimeter is quickly and easily selected with a simple turn of the single selector switch. Small enough to fit in most attache cases and equipped with a multiposition tilt stand, these multimeters are equally suited for design engineering, production testing, field servicing, and industrial maintenance applications.

In addition to the features described above, these multimeters also offer three particularly useful digital multimeter features: Insta-Ohms Quick Continuity Indicator, ten-ampere AC/DC current measurement capability and the capability of measuring both AC voltage and current in true RMS. True RMS permits accurate measurement of even the nonsinusoidal waveforms typically found in switching power supplies, motor speed controllers, SCR regulators, and digital systems. The multimeters include all of the following features as standard:

Superior Reliability

To ensure high reliability, Beckman Industrial Corporation uses a high performance CMOS analog-to-digital converter integrated circuit that directly drives a multiplexed liquid crystal display. Because active multimeter functions are performed by this one integrated circuit, the total number of electronic parts in the basic multimeter has been reduced. Reliability is further enhanced by 100 percent burn-in of each multimeter and complete factory test of every function and range.

Guaranteed Long-Term Accuracy

Specified accuracies are guaranteed for a full year. Long-term accuracy is assured through the use of an extremely stable, band-gap reference element and a high-precision, thin-film, voltage-divider network.

Ruggedness

The Model 4410 is designed to give years of trouble-free operation under normal use. The heavy-duty Model HD140 is designed to take accidental falls and still meet specified accuracies. The liquid-crystal-display and single rotary switch are both recessed and sealed to prevent damage while in a tool box or on the job. The case has been designed to keep out dirt, dust, liquids, and other fluid contaminants that can cause malfunctions in other multimeters.

Waterproof (Model HD140 Only)

The meter has been completely O-ring sealed around the case, the range selection knob, and the four screws that gain access to the circuitry inside the unit. The display window is gasketed and ultrasonically sealed in the case for a tight, waterproof seal. The input terminal jacks are O-ring sealed to keep moisture out.

Overload Protection

All inputs are protected against continuous overload conditions beyond the capability of the multimeter that may result from the measurement of unknown signals or from operator error. Also, all voltages and resistance ranges are protected against voltage transients up to six kV, ten microseconds duration by a metal-oxide varistor.

Ease of Use

A single switch turns on power and selects both function and the desired range. The liquid-crystal-display is easy to read both indoors and outdoors, even in direct sunlight.

Diode Test

Accurate measurements can be made of forward voltage drops across diodes and transistor functions.

Low Battery Indicator

The symbol "BT" appears in the display when the battery has approximately 10-hours of operational life remaining.

Versatile

Small, lightweight, and completely portable, the multimeter has a handy tilt bail for easy positioning and antiskid pads to keep it in place. Perfect for field, lab, or home use.

1.2 Specifications

Specifications are subject to change without notice.

The following specifications apply to the Models 4410 and HD140 Digital Multimeters

OPERATING TEMPERATURE RANGE
0°C to +50°C

STORAGE TEMPERATURE RANGE
-40°C to +65°C with battery removed

DISPLAY
4½-digit and liquid crystal-display (LCD) with a maximum reading of 19999

POWER
Single, standard nine-volt battery, NEDA 1604

BATTERY LIFE
Zinc-Carbon: 100 continuous hours, nominal

LOW BATTERY INDICATOR
Symbol "BT" appears in Digital Display with 10 hours battery life remaining

SHOCK AND VIBRATION
Meets MIL-T-28800 specifications

RELATIVE HUMIDITY
0% to 80%, 0°C to 35°C; 0% to 70%, 35°C to 50°C

TEMPERATURE COEFFICIENT (0°C to 18°C, 28°C to 50°C)
Less than 10% of applicable accuracy specification per °C

DIMENSIONS
6.90 inches (17.4 cm) long x 3.70 inches (9.3 cm) wide x 1.87 inches (4.6 cm) high

ANNUNCIATOR SYMBOLS

"-," Negative Sign; Positive Sign is implied

"AC," AC Function Selected

"Ω," Continuity is detected (Insta-Ohms)

"BT," Low Battery

"I," Input is exceeding selected range

WEIGHT

18 OUNCES (499 grams) including battery

CALIBRATION

Accuracy specifications guaranteed for one (1) year, 23°C ±5°C

MEASUREMENT RATE

Two measurements per second, nominal

CASE

High-impact ABS plastic, fire retardant

DC Volts

The following specifications apply to the Models 4410 and HD140 unless otherwise indicated.

RANGE	RESOLUTION	ACCURACY 23°C ±5°C
±200 mV	10 μV	.05% ±2 digits
±2V	100 μV	.06% ±2 digits
±20V	1 mV	.07% ±2 digits
±200V	10 mV	
±1500	100 mV	

INPUT IMPEDANCE (ALL RANGES)

10 megohms

NORMAL-MODE REJECTION RATIO

Greater than 60 dB, 45 Hz to 1kHz

COMMON-MODE REJECTION RATIO (1 KΩ UNBALANCE)

Greater than 140 dB to 1500 VDC

Greater than 120 dB, 45 Hz to 400 Hz, to 1000 VAC

MEASUREMENT RESPONSE TIME

Less than one second

OVERVOLTAGE PROTECTION

1500 VDC or peak AC on 2V through 1500V ranges

1000 VDC or peak AC on 200 mV range

Six kV transients, ten microseconds duration

AC Volts

The following specifications apply to the Models 4410 and HD140, unless otherwise indicated.

		ACCURACY, 10% TO 100% OF RANGE +23°C ±5°C		
RANGE	RESOLUTION	45 Hz to 2 kHz	2 kHz to 5 kHz	5 kHz to 10 kHz
200 mV	10 μV	0.5% ±20 digits		
2V	100 μV	±0.5% ±20 digits	±0.5% ±30 digits	±1.0% ±40 digits
20V	1 mV			
200V	10 mV			
1000V	100 mV	45 Hz to 1 kHz ±0.5% ±20 digits		

INPUT IMPEDANCE (ALL RANGES)

10 megohms shunted by less than 100 pF,

TRUE RMS, AC COUPLED

CREST FACTOR (PEAK/RMS RATIO)

Varies from 1 to 5. See following graph.

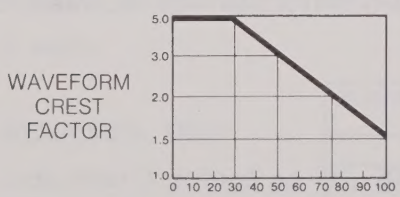

MEASUREMENT RESPONSE TIME

Less than two seconds

OVERVOLTAGE PROTECTION

1000 VRMS (1500V peak) or 1500 VDC on 2V through 1000V ranges

500 VRMS or 400 VDC on the 200 mV range

DC Current

The following specifications apply to the Models 4410 and HD140 unless otherwise indicated.

RANGE	RESOLUTION	ACCURACY, 23°C ±5°C
±200 μa	10 nA	0.2% ±2 digits
±2 mA	100 nA	
±20 mA	1 μA	0.3% ±2 digits
±200 mA	10 μA	
±2A	100 μA	0.5% ±2 digits
±10A	1 mA	1.0% ±2 digits

VOLTAGE BURDEN

200μA to 200 mA: 250 mV maximum at fullscale

2 amperes: 750 mV maximum at fullscale

10 amperes: 250 mV maximum at 10 amperes

OVERCURRENT PROTECTION

A input: 2 amperes, 600V (fused)

10A input: 10 amperes continuous,

20 amperes for 30 seconds (unfused)

RESPONSE TIME

Less than 1 second

AC Current

The following specifications apply to the Models 4410 and HD140 unless otherwise indicated.

		ACCURACY, 10% TO 100% OF RANGE +23°C ±5°C
RANGE	RESOLUTION	45 Hz to 1 kHz
200 μA	10 nA	0.7% ±20 digits
2 mA	100 nA	
20 mA	1 μA	0.8% ±20 digits
200 mA	10 μA	
2A	100 μA	1.0% ±20 digits
10A	1 mA	±1.5% ±20 digits

VOLTAGE BURDEN

200 A to 200 mA: 250 mV maximum at fullscale
2 amperes: 750 mV maximum at fullscale
10 amperes: 250 mV maximum at 10 amperes

OVERCURRENT PROTECTION

A input: 2 amperes, 600V (fused)
10A input: 10 amperes continuous,
20 amperes for 30 seconds (unfused)

TRUE RMS, AC COUPLED

RESPONSE TIME

Less than 2 seconds

RESISTANCE

The following specifications apply to the Models 4410 and HD140 unless otherwise indicated.

RANGE	RESOLUTION	TEST CURRENT ±10%	ACCURACY 23°C ±5°C
2K	0.1 Ω	1 mA	±0.1% ±2 digits
20K	1 Ω	100 μA	
200K	10 Ω	10 μA	
2M	100 Ω	1 μA	
20M	1 KΩ	0.1 μA	±0.3% ±2 digits

MAXIMUM OPEN-CIRCUIT VOLTAGE

4 volts

MAXIMUM IN-RANGE VOLTAGE

2 volts

RESPONSE TIME

Less than 1 second on 2K, 20K, and 200K ranges
Less than 2 seconds on 2M and 20M ranges

OVERLOAD PROTECTION

500 VDC or RMS AC, any range (Model 4410)
600 VDC or RMS AC, any range (Model HD140)

Diode Test

Diode test measurements can easily be performed with the resistance function. (Refer to Paragraph 4.6.).

Insta-Ohms Quick Continuity Indicator

RESPONSE TIME

Less than 100 milliseconds

DETAILED FUNCTIONAL DESCRIPTION

2.1 General

The central part of a Beckman Industrial Corp. Digital Multimeter is the single-chip, CMOS integrated analog-to-digital (A/D) converter chip. The A/D chip converts a DC analog input into a digital equivalent which then directly drives a triplexed liquid crystal display (LCD).

Peripheral components are used with this chip to perform a range of voltage, current, and resistance measurements. Included in these peripheral circuits are the following:

- Voltage divider and resistance reference network
- A true RMS AC-to-DC converter
- An ohms source
- An Insta-Ohms detection circuit
- A precision voltage reference
- An active filter
- An annunciator control circuit
- A triplexed liquid crystal display
- Input protection circuits
- A Function/Range Switch
- Power supply circuits
- Battery

2.2 Operating Features

A simplified block diagram is shown in Figure 1 and the circuit schematic diagrams in Figures 3 and 4. The Function/Range Switch routes the input signal to an appropriate input conditioning circuit(s), which scales, and/or converts, the applied input signal into a DC voltage.

The DC voltage is then filtered by an active filter for normal-mode rejection of interfering power line and audio-frequency noise.

The DC voltage is presented to the input of the A/D, which converts the DC to a digital equivalent that directly drives the liquid crystal display (LCD). The displayed reading is an accurate digital display of the applied input signal.

Decimal point positions on the display are determined automatically by the A/D according to the position selected on the Function/Range Switch.

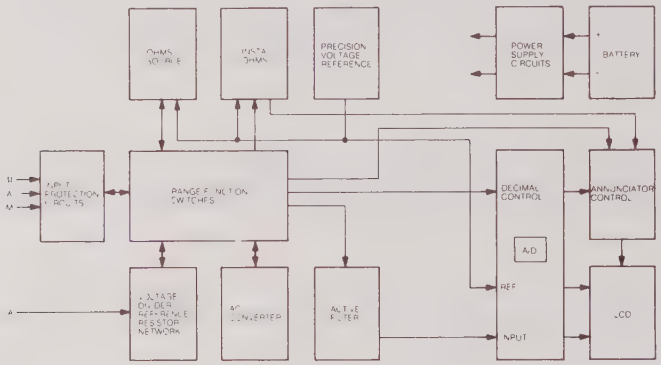

Figure 1. Simplified Block Diagram of 4½ Digit Multimeter

The "BT" symbol on the LCD is automatically displayed when the battery is low and should be replaced.

The "AC" symbol is displayed when any AC function is selected.

The "Ω" symbol is displayed when the resistance function is selected and a resistance of the fullscale value or less is connected across the V-Ω and COM input jacks.

Resistances greater than the fullscale value will cause a numeral "1" to be displayed on the LCD, indicating an over-range value.

The polarity of a DC (voltage or current) input is indicated by display of a minus sign (-) for negative inputs and by the absence of a sign for positive inputs.

A positive voltage or current over-range reading causes a numeral "1" to be displayed on the LCD; a negative over-range reading results in display of a "-1."

Block Diagram Analysis

Input Protection Circuitry

Input protection circuitry has been provided to protect the instrument from normally encountered overloads and function and range selection errors.

In the voltage ranges, primary over-voltage protection is provided by a 510KΩ series resistor (R17). This resistor limits the input current to the A/D to tolerable levels when the input exceeds 1500 VDC. Secondary protection from energy-limited transients up to 6000 volts is provided by a metal-oxide varistor (MOV).

In the resistance ranges, protection is provided by a positive-temperature-coefficient resistor (PTC), zener diodes VR1 and VR2, and diode bridge DB2.

In the "A" current ranges, protection from over-current and over-voltage is provided by a 2 ampere, 600V fuse and a diode bridge (DB1). The fuse will open for long-term overloads, and the diode bridge diverts overloads from the current measurement resistors. Although not fuse-protected, the ten-ampere current input connects directly to a durable 10 milliohm resistor which can withstand ten amperes continuously and up to 20 amperes for 30 seconds.

Input Conditioning Circuits

When measuring either voltage or current, the A/D circuit accurately converts an unknown DC voltage input within the range of -200 millivolts to +200 millivolts into a digital equivalent which is displayed on the LCD. If the input signal is other than a DC voltage in the ±200 millivolt range, the signal must be conditioned to be within this range.

Voltage Measurements

A precision-ratio voltage attenuator is used to reduce both AC and DC voltages when the input signals exceed the 200 millivolt limit. If the ±200 mV DC range is selected, the input signal feeds directly to the A/D input. On all higher voltage ranges, a precise power-of-ten tap is selected on the voltage attenuator, which is then connected to the A/D input.

On the AC ranges, AC input waveforms are scaled using the voltage attenuator in the same manner as for the DC input voltages. The appropriate output tap on the voltage divider is selected and is AC coupled to a true RMS AC converter. The converter

converts the AC input waveform into a proportional DC output which is coupled to the A/D for conversion.

Resistance Measurements

Resistance measurements are made with a ratio technique, where an unknown resistance is compared to an internal resistance standard. As shown in Figure 2, the unknown resistance is connected in series with a selected resistance standard and a current source. Because of negligible loading at the sensing terminals of the A/D converter, the ratio of the two resistors is equal to the ratio of their respective voltage drops.

$$\frac{V_x}{R_x} = \frac{V_{ref}}{R_{ref}}$$

The A/D converter uses a ratiometric conversion technique which relies solely on the ratio of the unknown voltage V_x to the reference voltage, V_{ref}.

When in the Resistance Function, the A/D is switched to convert DC input voltages (V_x), up to 2,000 volts, equivalent to the selected range at fullscale.

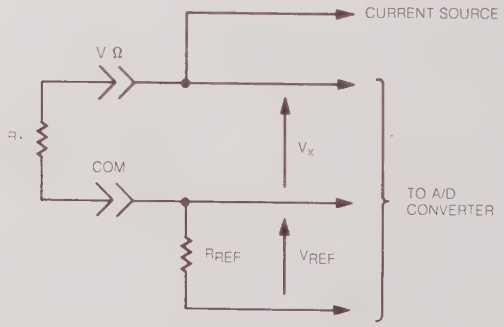

Figure 2. Input Conditioning Circuit for Resistance Measurements

Current Measurements

DC current is converted into a DC voltage by passing the input current through a selected shunt resistor, resulting in a voltage drop within the proper voltage range required by the A/D converter. In the AC current ranges, the shunt voltage drop is routed to the same RMS converter used in the conversion of AC voltages. The shunt resistors that are switched in series to make current shunt values range from 0.01Ω through 1KΩ.

Insta-Ohms Continuity Indicator

The Insta-Ohms quick continuity indicator allows a very quick determination of circuit continuity. Because the Insta-Ohms circuit is separate from the main A/D converter circuitry, normal conversion time is not required and indication of the "Ω" symbol in the digital display occurs almost immediately. Resistances of fullscale value or less will enable the "Ω" symbol.

SERVICING

3.1 General

This section contains procedures for calibration, maintenance, and repair of the 4½ Digit Multimeters. Also included are procedures for Multimeter disassembly, component replacement, Function/Range Switch disassembly and check procedures.

3.2 Servicing Policy

ONE YEAR LIMITED WARRANTY POLICY ON NEW INSTRUMENTS

The Beckman Digital Multimeter is warranted in its entirety against any defects of material or workmanship which develop for any reason whatsoever, except abuse, within a period of one (1) year following the date of purchase of the Multimeter by the original purchaser. This warranty is extended by Beckman Industrial (Beckman), only to the original user of the Multimeter, who must, as a CONDITION PRECEDENT TO WARRANTY COVERAGE AND PERFORMANCE THEREUNDER BY BECKMAN INDUSTRIAL, complete and return the Warranty Registration Card, received on purchase of the Multimeter.

In the event a defect develops during the warranty period, Beckman will, at Beckman's election, repair or replace the Multimeter with a new or reconditioned model of equivalent quality. To obtain performance of any obligation of Beckman under the warranty, the original purchaser or original user must return the defective Multimeter, postage prepaid, along with a handling charge of $3.50 (prices subject to change), to:

Beckman Industrial Corp.
630 Puente Street
Brea, CA 92621

Attention: Customer Service

Or to any other authorized Beckman Service Center.

In the event of replacement with a new or reconditioned model, the replacement unit will continue the warranty period of the original Multimeter. Replacement units will be returned by air, typically with only one (1) working day turnaround at the Service Center.

****

ANY IMPLIED WARRANTIES ARISING OUT OF THE SALE OF THE MULTIMETER, INCLUDING BUT NOT LIMITED TO IMPLIED WARRANTIES OF MERCHANTABILITY AND FITNESS FOR A PARTICULAR PURPOSE, ARE LIMITED IN DURATION TO THE ABOVE STATED ONE (1) YEAR PERIOD. BECKMAN SHALL NOT BE LIABLE FOR LOSS OF USE OF THE MULTIMETER OR OTHER INCIDENTAL OR CONSEQUENTIAL DAMAGES, EXPENSES, OR ECONOMIC LOSS OR FOR ANY CLAIM OR CLAIMS FOR SUCH DAMAGE, EXPENSES OR ECONOMIC LOSS.

****

Some states do not allow limitations on how long implied warranties last or the exclusion or limitations of incidental or consequential damages, so the above limitations or exclusions may not apply to you.

This warranty gives you specific legal rights, and you may also have other rights which vary from state to state.

3.3 After-Warranty Repair or Exchange Service

After-warranty service is provided by Beckman in two ways. You may elect to have your instrument repaired at an authorized Beckman repair facility, or you can exchange your defective out-of-warranty instrument for a reconditioned instrument at a flat rate, contained on Beckman's current price list. The replacement unit carries a three (3) month limited warranty. Contact any authorized Beckman Distributor or Beckman Industrial, for the current non-warranty replacement rates and instructions for shipping the instrument. Repairs made at the Factory Service Center are at a $69.00 flat rate. Include payment or purchase order with meter specifically authorizing repair and pay only $64.00.

3.4 Calibration Service

Each Beckman Multimeter should be calibrated once a year or after it is repaired. A procedure to accomplish this is contained in the next section. If you do not have the necessary equipment specified to accomplish calibration, this service can be performed by an authorized Beckman Service Center. If you wish to take advantage of this service, contact any authorized Beckman distributor, repair facility, or Beckman Industrial Corporation for current calibration rates and instructions for shipping the instrument.

Shipping Instructions

A multimeter returned for calibration or repair should be shipped with the following information or items: company name, customer's name, address, telephone number, proof of purchase (warranty repairs), a description of the problem encountered or service required, and the appropriate service charge.

CALIBRATION

4.1 Calibration Procedure

To maintain the accuracy specifications of the Multimeter, it is important that the Multimeter be calibrated at least once a year and every time it is repaired. The text equipment needed to accomplish this procedure is described below:

Instrument Type	Required Characteristics	Recommended Models
dc calibrator	Voltage Range: 0 to 1000Vdc Accuracy: + 0.025%	Rotek 600 or Equivalent
ac calibrator	Voltage Range: 0 to 110 Vac Frequency Range: 400Hz to 20kHz Voltage Accuracy: 0.05% at 400Hz; 0.5% at 20kHz	Rotek 600, HP745A, or Equivalent

4.2 DC Calibration

1. Set meter to the 200mV DC position.
2. Set the input voltage to 0 volts DC.
3. Adjust R18 on display board for a clear display. View the display with the LCD top tilted away from the viewer by approximately 25°.
4. Note the offset voltage displayed with the zero volt input. (Maximum offset should be $\leq \pm$ 000.02). Input + 190.00 mV DC and adjust R20 for a displayed reading of + 190.00 mV + offset.

   Example:

   If offset is -00.01, adjust R20 for a reading of +189.99 i.e., 190 + (-00.01).

   If offset is +00.01, adjust R20 for a reading of +190.01 i.e., 190.00 + 00.01.

   Reverse input leads and verify that the offset error reverses.

   If offset is -00.01, the display should read -190.01.

   If offset is +00.01, the display should read -189.99.

AC Calibration

NOTE

For the AC portion of the calibration, Steps 5 through 10 of the following procedure, shield spacing is critical. The AC calibration must be performed with the shield in place and positioned as it would be in the closed, normally assembled, instrument.
At present this condition is obtained by temporary replacement of the standard back case with a special back case having holes for screwdriver access to the calibration adjustments. The special back case is assembled to the front case/module assembly, thus closely spacing the shield. The adjustments are then made through the holes.

5. Set meter to the 200 mV AC position.
6. Input 190.00 mV AC at 400HZ. Adjust R16 on the input board for a displayed reading of 190.00 mV ± 0.5 maximum.
7. Input 190.00 mV AC at 20 kHZ. Adjust C5 for a displayed reading of 190.00 ± 0.5 maximum.
8. Switch the meter to the 20 V AC position. Input 19.000 V AC at 10 kHZ. Adjust C4 for a displayed reading of 19.000 ± 0.20 maximum.
9. Switch the meter to the 2 V AC position. Input 1.9000 V AC at 10 kHZ. Adjust C3 for a displayed reading of 1.9000 ± .0020 maximum.
10. Repeat steps 8 and 9 until displayed readings meet specifications.

4.3 Maintenance

Regular operator maintenance of the multimeter consists of: cleaning case and window, battery replacement, and fuse replacement. All other repairs should be performed by a Factory Authorized Service Center or other qualified instrument service personnel.

a. Cleaning Case and Window

CAUTION

Do not use aromatic hydrocarbons or chlorinated solvents for cleaning. These chemicals will react with plactics used in construction of the case.

The front panel case should be cleaned with a mild solution of detergent and water. Apply sparingly with a soft cloth and allow to dry completely before using.

b. Battery Replacement (Model 4410)

WARNING

To prevent electrical shock hazard, turn off the Multimeter and disconnect test leads before removing the back cover.

1. Remove two screws from battery cover.
2. Remove battery cover by pushing up and, then, pulling it out.
3. Lift battery from compartment.
4. Unsnap battery connector from battery and remove battery.
5. Snap battery connector onto new battery.
6. Insert battery into compartment.
7. Replace battery cover by pushing it forward and down.
8. Replace battery cover screws.

c. Battery Replacement (Model HD140)

To prevent electrical shock hazard, turn off Multimeter and disconnect test leads before removing back cover.

1. After disconnecting test leads and turning off Multimeter, remove back cover by removing four screws, then lift off back cover.

CAUTION

Failure to turn off the instrument before installing the battery could result in damage to the battery if it is connected to the battery terminal incorrectly.

2. The battery is located in front of the case. Disconnect battery from instrument and replace with a standard 9-volt transistor battery.
3. Replace back cover and secure with four screws, taking care to seat O-ring seal uniformly.

d. Fuse Replacement (Model 4410)

1. Remove two screws from battery cover.
2. Remove battery cover by pushing up and, then, pulling it out.
3. Lift battery from compartment.
4. Grasp loose end of ribbon. Hold Multimeter with other hand and pull the ribbon to release the fuse.

d. **Fuse Replacement (Model 4410) Continued**

5. Remove old fuse.
6. Turn Multimeter over to allow spare fuse to drop out.
7. Replace center of ribbon across fuse opening and press new fuse into place. Be sure the ribbon is between the fuse clips, not caught on the clips.
8. Insert battery into compartment.
9. Replace battery cover by pushing it forward and down.
10. Replace battery cover screws.

WARNING

Do not operate Multimeter with back cover removed (except during calibration).

e. **Fuse Replacement (Model HD140)**

WARNING

To prevent electrical shock hazard, turn off Multimeter and disconnect test leads before removing back cover.

1. After disconnecting test leads and turning off Multimeter, remove back cover by removing four screws, then lift off cover.
2. The fuse is located in the upper half of the instrument. Remove old fuse and replace with spare.

WARNING

To prevent fire, use Type 2A/600V fuse only.

3. Replace back cover and secure with four screws.

WARNING

Do not operate Multimeter with back cover removed (except during calibration).

TROUBLESHOOTING

5.1 Repair Guide

Except for the replacement of the battery or fuse, repair of the Multimeter should be performed by only the Beckman Service Center or by other qualified instrument service personnel.

CAUTION - The CMOS integrated circuits are subject to damage created by electrostatic discharge. This component should be handled only by qualified personnel equipped with anti-static grounding devices.

This section is by no means a prescription for diagnosing and repairing problem meters. It is intended to be used as a troubleshooting guide by qualified technicians, knowledgeable in electronics. The assumption is made that the individuals who perform the repair understand the schematic and know how the Multimeter functions.

a. SYMPTOMS AND THEIR PROBABLE CAUSES

(NOTE: One of the most common causes for failure of the Multimeter is high voltage transients, especially when the meter is used without reasonable care on TV repairs. High voltage transients can damage the two most important components in a meter: The attenuator network (U1) and the multiprocessor (U5).)

1. READINGS ARE OFF OR THE METER CANNOT BE CALIBRATED:
   - Check U1 (attenuator)
   - Check each resistor in the network for the right values (9MΩ, 90KΩ, 9KΩ, 900Ω, and 100Ω).

2. METER DOES NOT ZERO OUT (when input is shorted):
   - Check the chip (U2) - The symptoms will be more prominent on the 1,000 VAC and 1,500 VDC.
   - Check board cleanliness (e.g., if flux is not washed off properly after any solder repair job, this "dirty board" condition will affect zeroing out).

3. PROBLEMS THAT ARE OHMS-RELATED:
If the U10, Q1, R9, R10, C30, R34, and R3 are defective, ohms ranges can be affected, or the parts that make up the ohms protection circuitry (DB2, PTC, R7, VR2, and VR1) can also affect the ohms ranges.

Low ohms readings can also be caused by a leaky capacitor or a bad attenuator (U1).

A bad Q1 can cause low or high ohms readings. Check the diodes VR2 and VR1 for shorts, the C30 for leakage, the U10, and other resistors for correct values.

4. CURRENT RANGE PROBLEMS:
First check the fuse and the diode bridge (DB1). For erroneous readings, check the lowest values in the attenuator (U1), 900Ω and 100Ω, as well as R1, R2, R3, and R4.

The 10A range is not fuse-protected, so if a high current (over 20A for more than 30 seconds) goes through the meter and the shunt did not protect the meter, the board trace itself will be burned. In that case, repair of the board is not recommended; it should be replaced.

5. MISSING SEGMENTS ON DISPLAY (OR BAD DISPLAY):
Check elastomer connectors, U5, U7, U12, or the LCD.

If a ghost segment is present on the display, it can be caused by the potentiometer (R18), the U10, or the LCD.

6. OL READINGS OR READINGS THAT ARE INACCURATE OR UNSTABLE:
Causes can be defective components in the reference voltage circuitry (U10, U12, Q8, C31, R36, VR3) or in the negative supply circuitry (U3, C15, C16, C17).

7. AC PROBLEMS:
Check the RMS converter (U2), the U4, and the capacitors from AC/DC converter (C13, C18, C14, C6, C5) for leakage or shorts.

b. SYMPTOMS THAT CAN BE EXPECTED WHEN PART (SEE LISTED BELOW) IS DEFECTIVE

1. U5 (A/D Converter)
   . 1,000 VAC and 1,500 VDC will not zero or OL
   . DCV readings will be high
   . Missing segment
   . Unstable DCV

2. U2 (RMS Converter)
   . AC will not zero out (especially 1,000 VAC)
   . AC reads "OL"

3. Switch Blocks
   . No readings at all on specific ranges
   . OL readings
   . Readings too high or too low on ohms
   . Meter will not zero out.

   (NOTE: Handle the switches with extreme care when taking meter apart or reassembling it. Contacts can easily be damaged. Secondly, always check that the flex cable is properly connected whenever reassembling or troubleshooting.)

Most problems can be readily troubleshooted by following the above guidelines; however, there will always be those cases where your patience will be tested and it takes a while to locate the problem (especially leaky capacitors or problems stemming from the PC board itself--bad traces or bad board capacitance).

If you decide to give up the "fun" of discovering the problem yourself, remember that you have the option of sending the meter to the factory Service Center where out-of-warranty meters are repaired for a flat fee.

I wish you good luck. Use the schematic parts locator and the diagram, and feel free to telephone for help.

Victor Tolan
Customer Service Manager

5.2 Function/Range Switch Contact Position Matrix

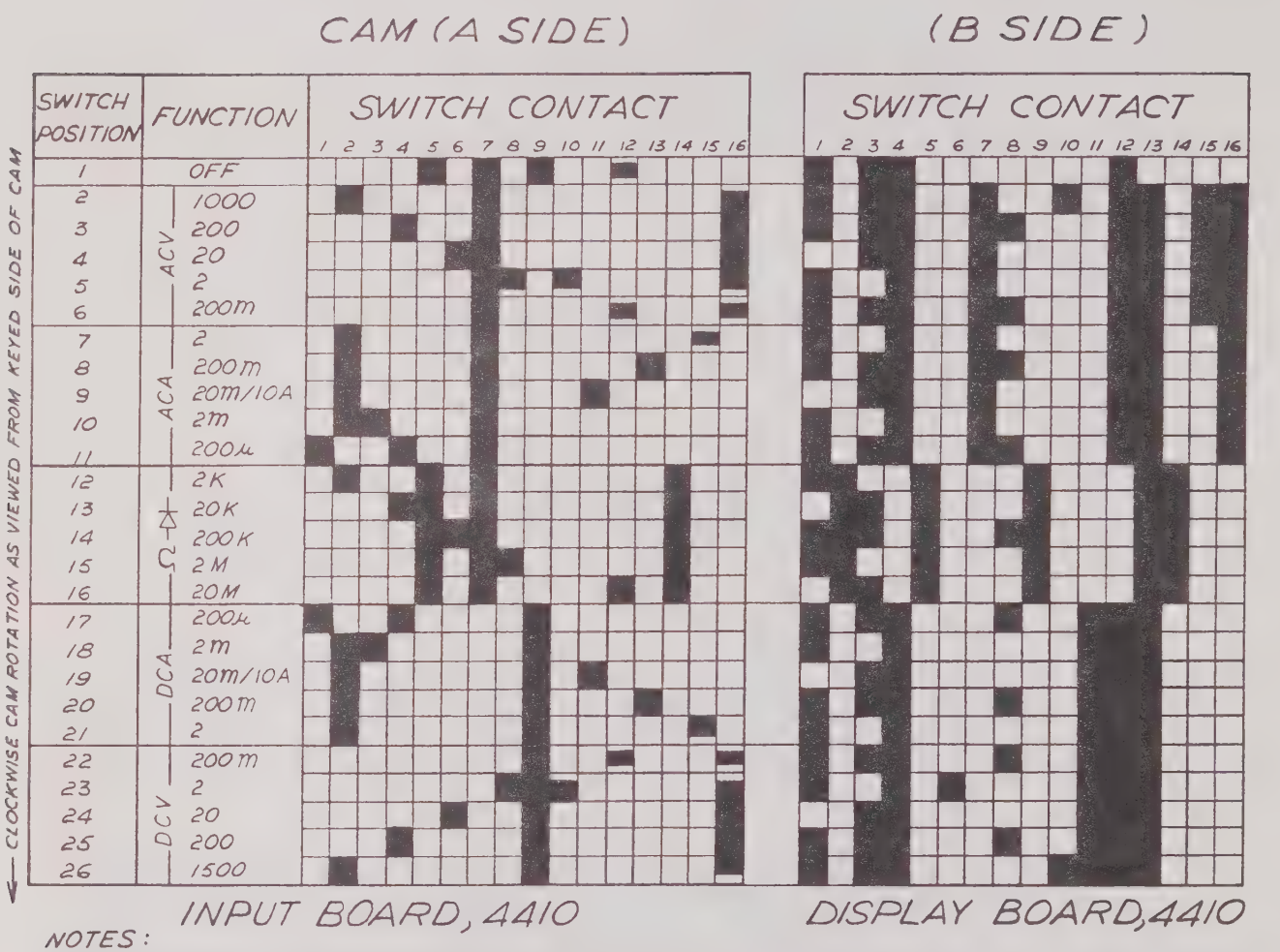

NOTES:

1. CAM SURFACES FACE AWAY FROM FRONT OF METER (NON-KEYED SIDE OF CAM) FOR "A" SIDE
2. SWITCH CONTACT #1 IS CLOSEST TO CAM HUB
3. ■ = CLOSED SWITCH ▬ = BREAK BEFORE MAKE
   □ = OPEN SWITCH.
4. CAM SURFACES FACE TOWARD FRONT OF METER (KEYED SIDE OF CAM) FOR "B" SIDE

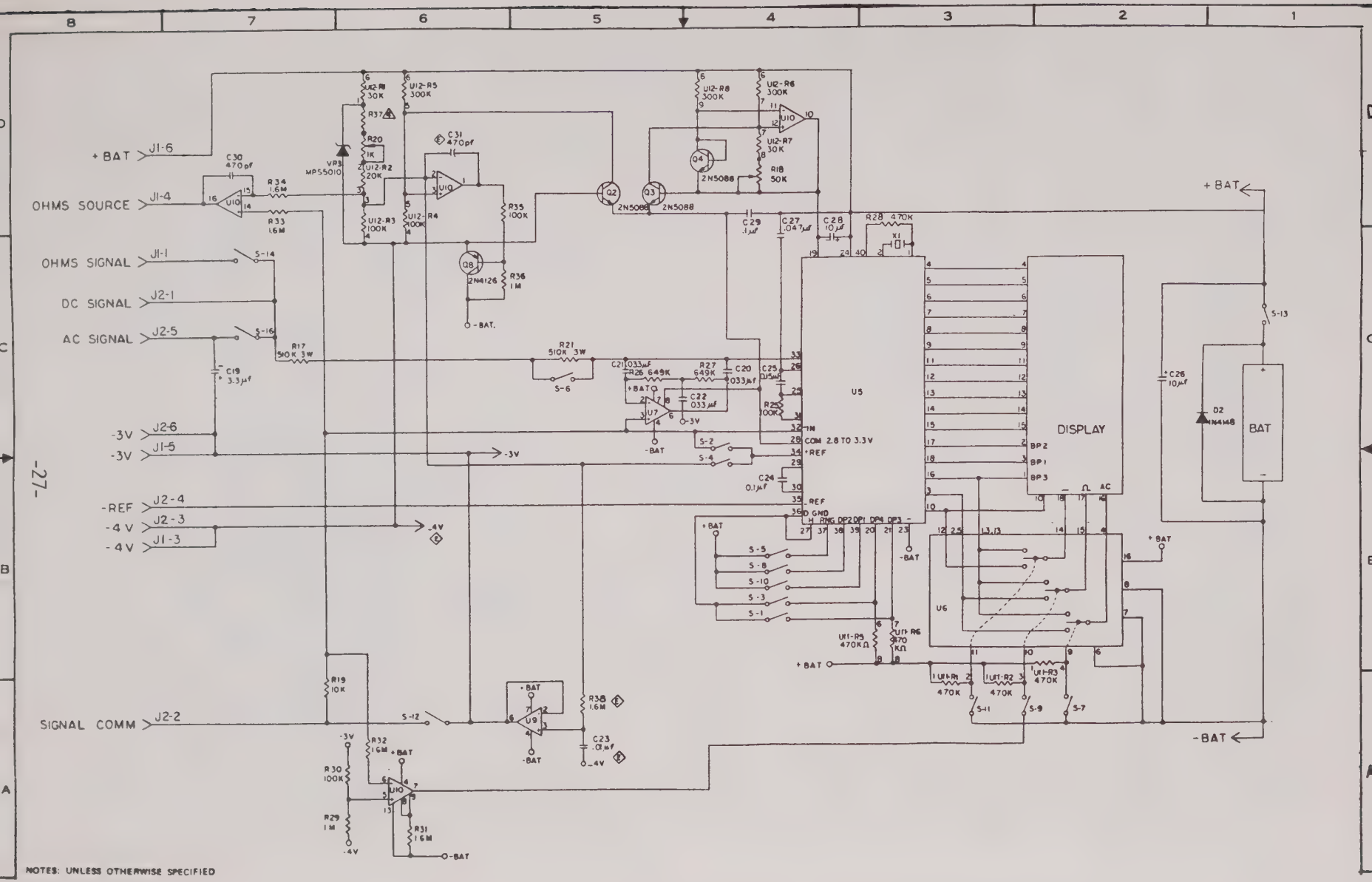

5.3 4½ DIGIT METER - SCHEMATIC (INPUT BOARD)

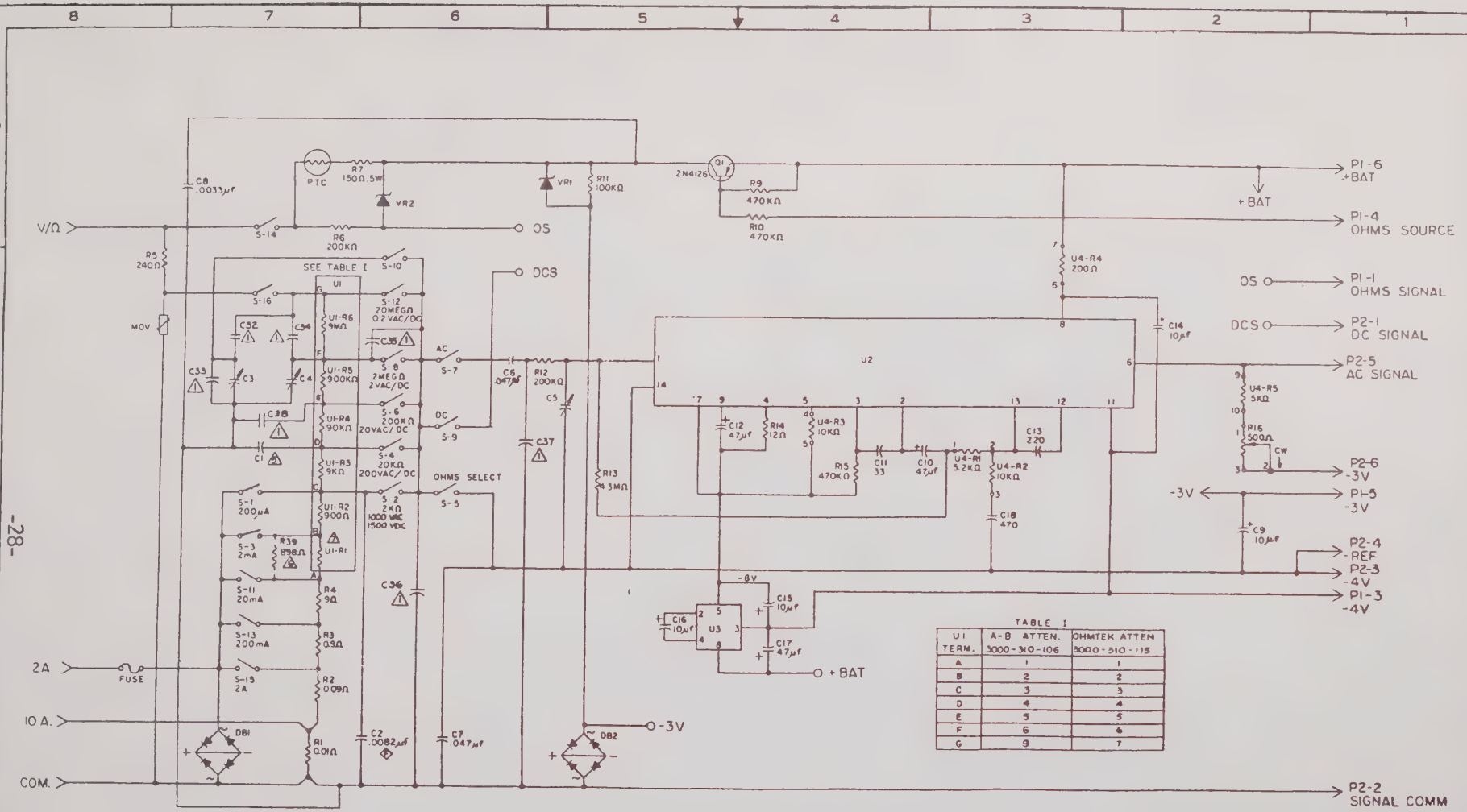

TABLE I

U1 TERM.	A-B ATTEN. 3000-310-106	OHMTEK ATTEN 3000-510-115
A	1	1
B	2	2
C	3	3
D	4	4
E	5	5
F	6	6
G	9	7

⚠7 FOR A-B ATTN U1-R1 IS 90Ω. FOR OHMTEK ATTN U1-R1 IS 100Ω ⚠6 USE WITH OHMTEK ATTN ONLY
⚠5 USE 470PF(3000-120-100) WITH A-B ATTEN., USE 330 PF (3000-120-102) WITH OHMTEK ATTEN.
3. ALL CAPACITORS VALUES ARE IN PICOFARADS. 2. ALL RESISTORS VALUES ARE IN OHMS. ⚠1 TRACE
CAPS: C32,C33, C34, C35, C36, C37, C38
NOTE: UNLESS OTHERWISE SPECIFIED.

5.4 4½ DIGIT METER - SCHEMATIC (DISPLAY BOARD)

REPLACEMENT PARTS AND SUPPLIES

The replacement parts and supplies listed in this section may be ordered from Beckman, or your local service center. Beckman requires CASH-IN-ADVANCE to be sent along with your order to the address listed below. A sample order form is enclosed at the back of this manual. Please make sure you use it to order parts.

To determine Beckman part number and description of the part to be replaced, first find the part located on an illustration. Next, note the illustration figure number or parts index number. Locate the identical figure number on the parts list. Notice the schematic description.

Please note Beckman Industrial Corp. address:

Beckman Industrial Corp.
Attention: Customer Service
630 Puente Street
Brea, CA 92621

Multimeter Assembly

Item No.	Beckman Industrial Corp. Part No.	Description	Suggested Resale Price (ea) U.S. $
3	FG3000-422-190	Battery Cover (4410)	2.00
1	FG3000-572-110	House Front (4410)	23.16
8	FG3000-424-184	Yellow Bail (HD140)	1.80
2	FG3000-980-128	Rear Case, Tan (4410)	7.00
8	FG3000-421-184	Bail, Warm Bran (tan)	1.20
16	FG3000-450-175	Case Gasket	3.00
15	FG3000-450-161	O Ring/Screw (HD140) 4-40x1 3/4 L	.64
14	FG3000-450-106	Screw #4 (short)	.16
13	FG3000-450-103	Screw #4 (long)	.16
10	FG3000-450-177	Fuse Strap	.68
9	FG3000-400-112	Fuse	2.80
7	FG3000-450-186	Shield Spacer	1.20
6	FG3000-451-169	Shield Folded	4.00
5	FG3000-450-105	O Ring	.16
4	FG3000-370-115	Spring Contact	.16
2	FG3000-980-119	House Rear HD Series	14.00
1	FG3000-572-135	House Front HD 140	25.40
1	FG3000-450-145	Screw 4-40 (4410)	.32

PARTS INCLUDED IN FRONT CASE ASSEMBLIES ARE: CASE PLASTIC, SHAFT, WINDOW, WINDOW SEAL, INPUT JACK OVERLAY, AND KNOB.

PARTS INCLUDED IN REAR CASE ASSEMBLY ARE: REAR PLASTIC CASE, BATTERY COVER, (4410) BAIL, RUBBER FEET, RUBBER STRIPS.

NOTE: THE SHAFT FOR THE FRONT CASE CAN BE ORDERED SEPARATELY: SHAFT PART NUMBER FG3000-420-102, FOR $1.00.

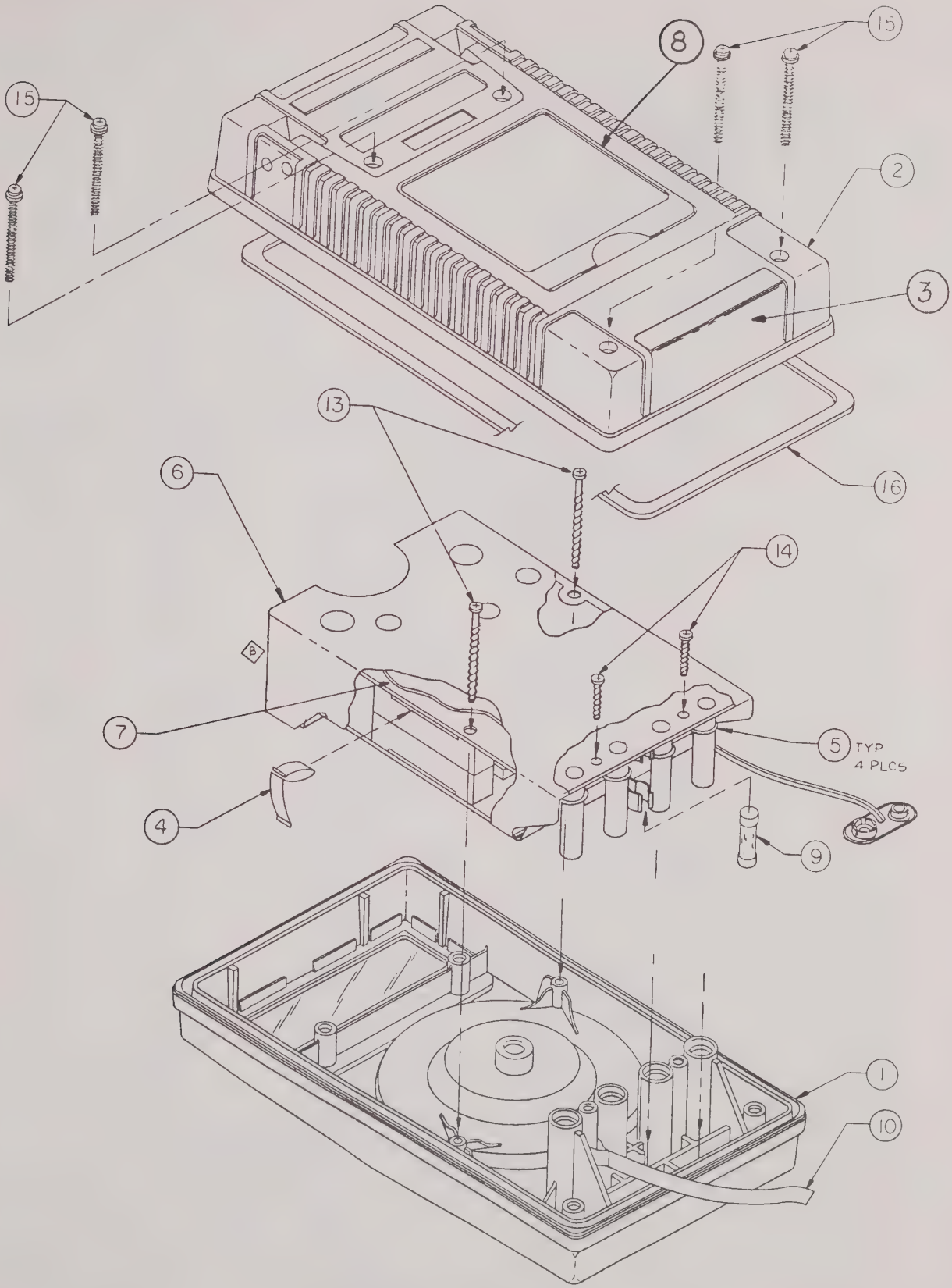

4½ Digit Meter Assembly

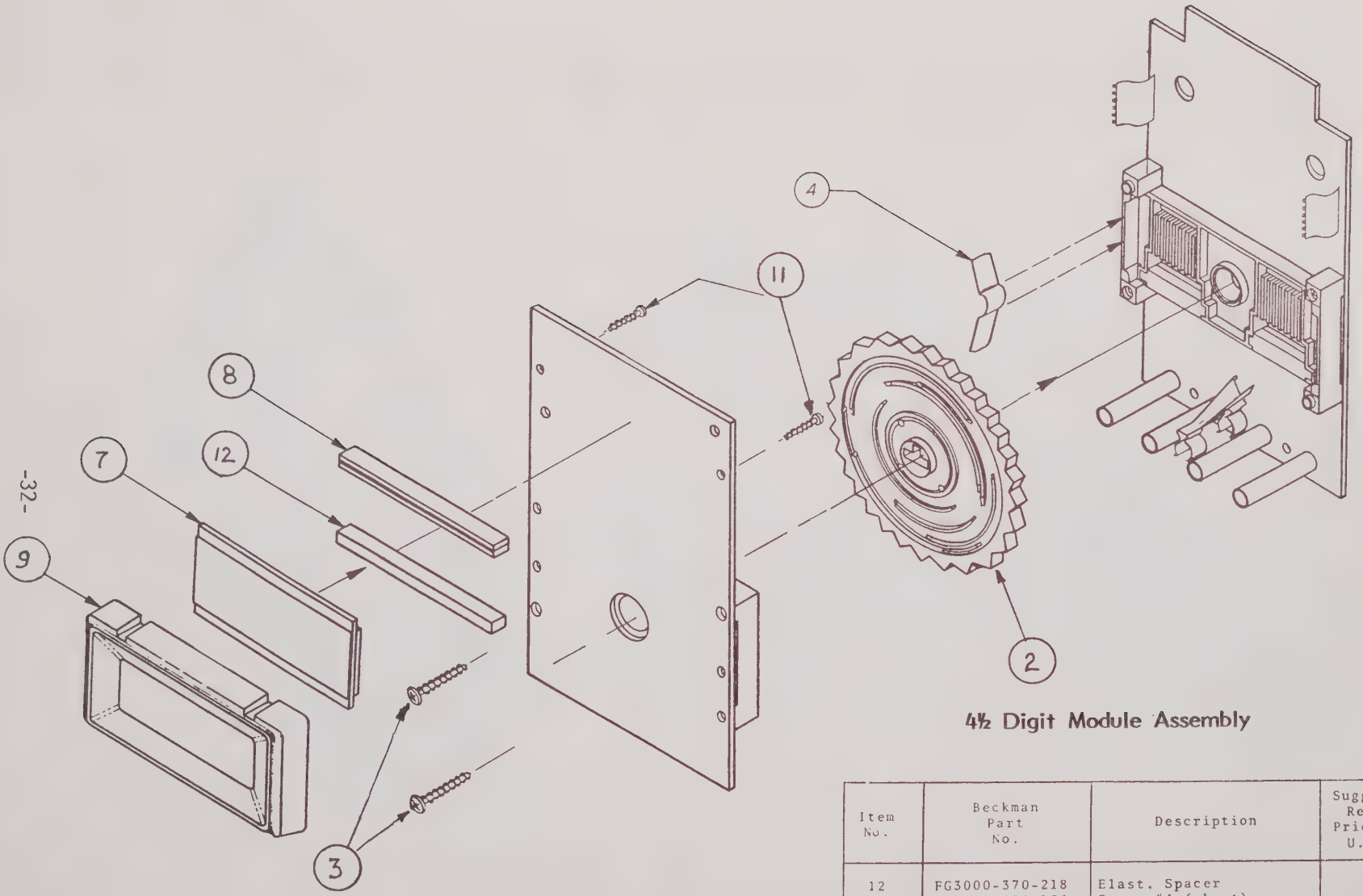

4½ Digit Module Assembly

Item No.	Beckman Part No.	Description	Suggested Resale Price (ea) U.S. $
12	FG3000-370-218	Elast. Spacer	.96
11	FG3000-450-106	Screw #4 (short)	.16
9	FG3000-420-186	Bezel Tan (4410)	2.56
9	FG3000-422-186	Bezel, Yellow (HD140)	2.72
8	FG3000-370-217	Zebra Conn.	2.72
7	FG3000-390-104	LCD Triplexed	18.36
4	FG3000-450-110	Spring Detent	.32
3	FG3000-450-102	Screw #6 (module)	.16
2	FG3000-420-197	Cam 4½	3.36

4½ Digit Meter - Display Board

Schematic Location	Ref. Des.	Beckman Industrial Corp. Part No.	Description	Suggested Resale Price (ea) U.S. $
A7	R19	FG3000-001-103	Res 10K ohm .25w	.32
C4	C27	FG3000-130-119	Cap .047 UF Mylar	.96
C3	R28	FG3000-001-474	Res 470K ohm .25w	.32
A6,D7,A5	R32,32			
	33,34,38	FG3000-001-165	Res 1.6M ohm .25w	.32
A7,C6	R29,36	FG3000-001-105	Res 1M ohm .25w	.64
A7,D6	R30,35	FG3000-001-104	Res 100k ohm .25w	.80
C7,C5	R17,21	FG3000-052-130	Res 510K ohm 3w	1.28
C5,C4	R26,27	FG3000-051-868	Res 649K ohm .125w	.48
C4	R25	FG3000-051-122	Res 100K ohm .125w	.48
D4	R18	FG3000-090-114	Pot 50K ohm	2.40
D6	R20	FG3000-090-115	Pot 1K ohm	2.40
D7,D6	C30,31	FG3000-120-100	Cap 470pf Dip	1.36
C4	C25	FG3000-130-106	Cap 0.15uf 5%	1.68
B4,D4	C24,29	FG3000-130-111	Cap 0.1uf	1.20
C4,C5	C20,21,22	FG3000-130-110	Cap .033uf	.96
C2,C4	C26,28	FG3000-151-101	Cap 10uf Tan	2.08
C7	C10	FG3000-151-100	Cap 3.3uf Tan	2.00
A5	C23	FG3000-130-112	Cap .01uf	.96
C2	D2	FG3000-102-100	5M Sig Diode IN4148	.96
D6	VR3,R37	FG3000-560-117	Ref Diode & Res Assy.	6.12
D5,D4	Q2,3,4	FG3000-251-101	Trans. NPN 2N5088	.84
C6	Q8	FG3000-251-100	Trans. PNP 2N4126	1.30
C3	X1	FG3000-360-105	120 KHZ Crystal	10.40
B3	U11	FG3000-300-113	Sip 8 Pin	3.60
D4	U12	FG3000-300-112	Sip 10 Pin (9 pin)	3.42
A	U10	FG3000-270-114	IC MC 14573 CP Quad Amp	9.18
A5	U9	FG3000-270-113	IC LF441CN JFET Amp	3.76
C5	U7	FG3000-270-115	IC CMOS OP Amp	5.40
C4	U5	FG3000-270-110	ANA/DIG Convert	24.80
B3	U6	FG3000-270-105	IC CD4053	3.00
	J1,2	FG3000-370-237	Conn 6 Pin (female)	1.40
	4	FG3000-450-118	Cable Tie	.32
	3	FG3000-370-187	Bat Snap MX	.64
	2	FG3000-420-100	Switch Block	9.60

4½ Digit Meter - Display Board

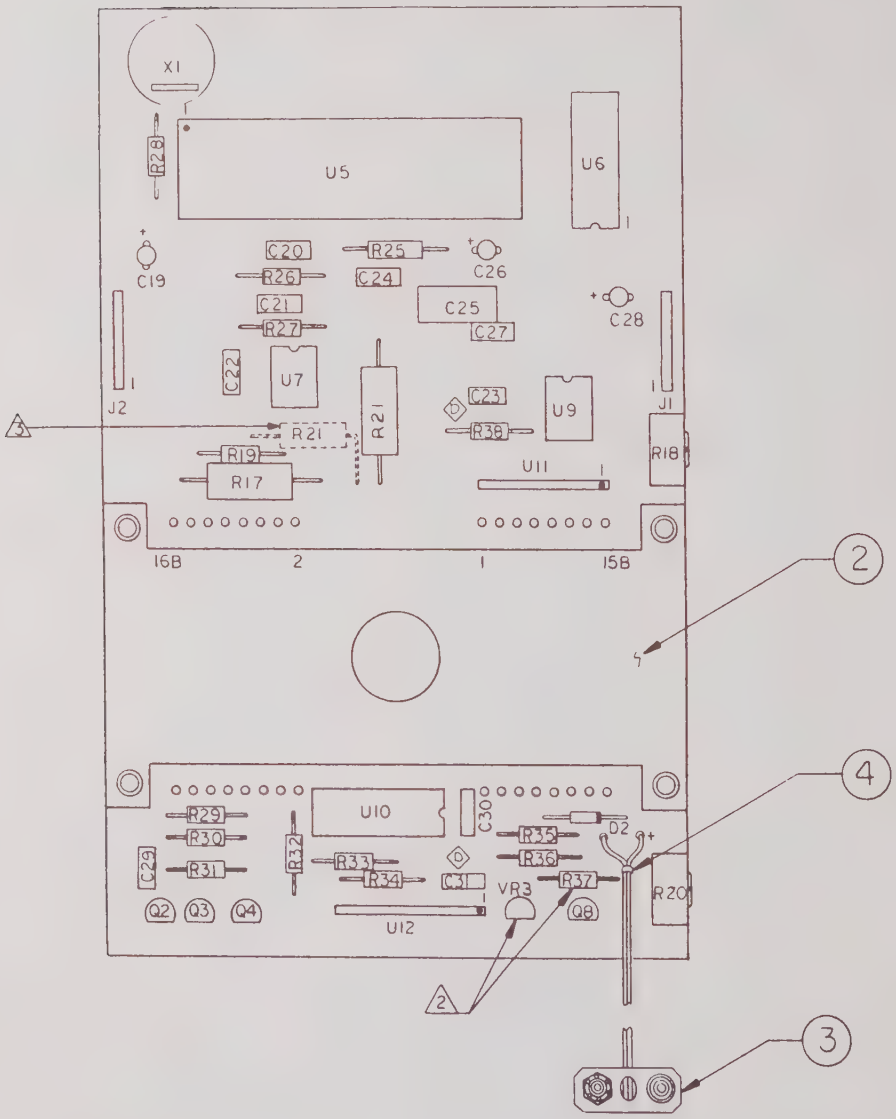

3 REV. "B" BOARDS ONLY
2 VR3,R37 SELECTED IN TEST

4½ Digit Meter - Input Circuit Board

Schematic Location	Ref. Des.	Beckman Industrial Corp. Part No.	Description	Suggested Resale Price (ea) U.S. $
C5	R13	FG3000-001-435	Res 4.3M ohm .25w	.72
D4,B4	R9,10,15	FG3000-001-474	Res 470K ohm .25w	.32
D5	R11	FG3000-001-104	Res 100K ohm .25w	.80
C4	R14	FG3000-001-120	Res 12 ohm .25w	.32
C8	R5	FG3000-031-241	Res 240 ohm .5w	.80
D7	R7	FG3000-031-151	Res 150 ohm	.84
A7	R1	FG3000-040-101	Res .01 ohm Shunt (10A)	3.50
B7	R39	FG3000-051-596	Res 898 ohm .125w MF	1.60
B7	R4	FG3000-051-106	Res 9 ohm .5w MF	1.84
D7,C6	R6,12	FG3000-052-101	Res 200K ohm 3w MF	1.20
B7	R2	FG3000-071-104	Res .0898 ohm WW	2.30
B7	R3	FG3000-071-101	Res .9 ohm WW	3.44
C8	MOV	FG3000-081-102	Varistor 1720V	5.90
D7	PTC	FG3000-083-103	Res 750 ohm PTC	3.76
C2	R16	FG3000-090-107	Res 500 ohm POT	2.96
C3	C13	FG3000-101-103	Cap 220pf Ceramic Disc	1.20
C4	C11	FG3000-101-101	Cap 33pf Ceramic Disc	1.20
C7	C1	FG3000-120-102	Cap 330pf Dip	2.08
B3	C18	FG3000-120-100	Cap 470pf Dip	1.50
A7	C2	FG3000-130-121	Cap .008pf Mylar	.84
D7	C9	FG3000-130-109	Cap .003 Mylar	.84
A6	C7	FG3000-130-100	Cap .047 Mylar	1.10
C6	C6	FG3000-131-107	Cap .047 400V	1.30
C4,C5,B4	C10,12, 17	FG3000-151-102	Cap 47 Tantalum	3.40
B2,C2,B4, B5	C9,14, 15,16	FG3000-151-101	Cap 10 Tantalum	2.08
C7,C5	C3,4,5	FG3000-190-103	Cap Trim Bottom Adjust Blue	1.60
A7,A5	DB1,2	FG3000-311-100	Diode Bridge 2A	3.76
D6,D5	VR1,2	FG3000-231-101	Diode Zener	2.00
D5	Q1	FG3000-251-100	Trans PNP 2N4126	1.30
C4	U2	FG3000-270-101	RMS Converter	26.90
B5	U3	FG3000-270-111	ICL 7660 CPA Volt Conv	9.24
C3	U4	FG3000-300-110	SIP 10 Pin	2.64
C7	U1	FG3000-310-115	Prec. Volt Div Ohmtek	22.00
	P1,2	FG3000-370-236	Cable Flat 6 Pin	3.20
	2	FG3000-420-100	Switch Block	9.60
	5*		Fuse Clip Bottom	
	4*		Fuse Clip Top	

*Can be purchased as an assembly FG0000-980-125, for $5.00

4½ Digit Meter - Input Circuit Board

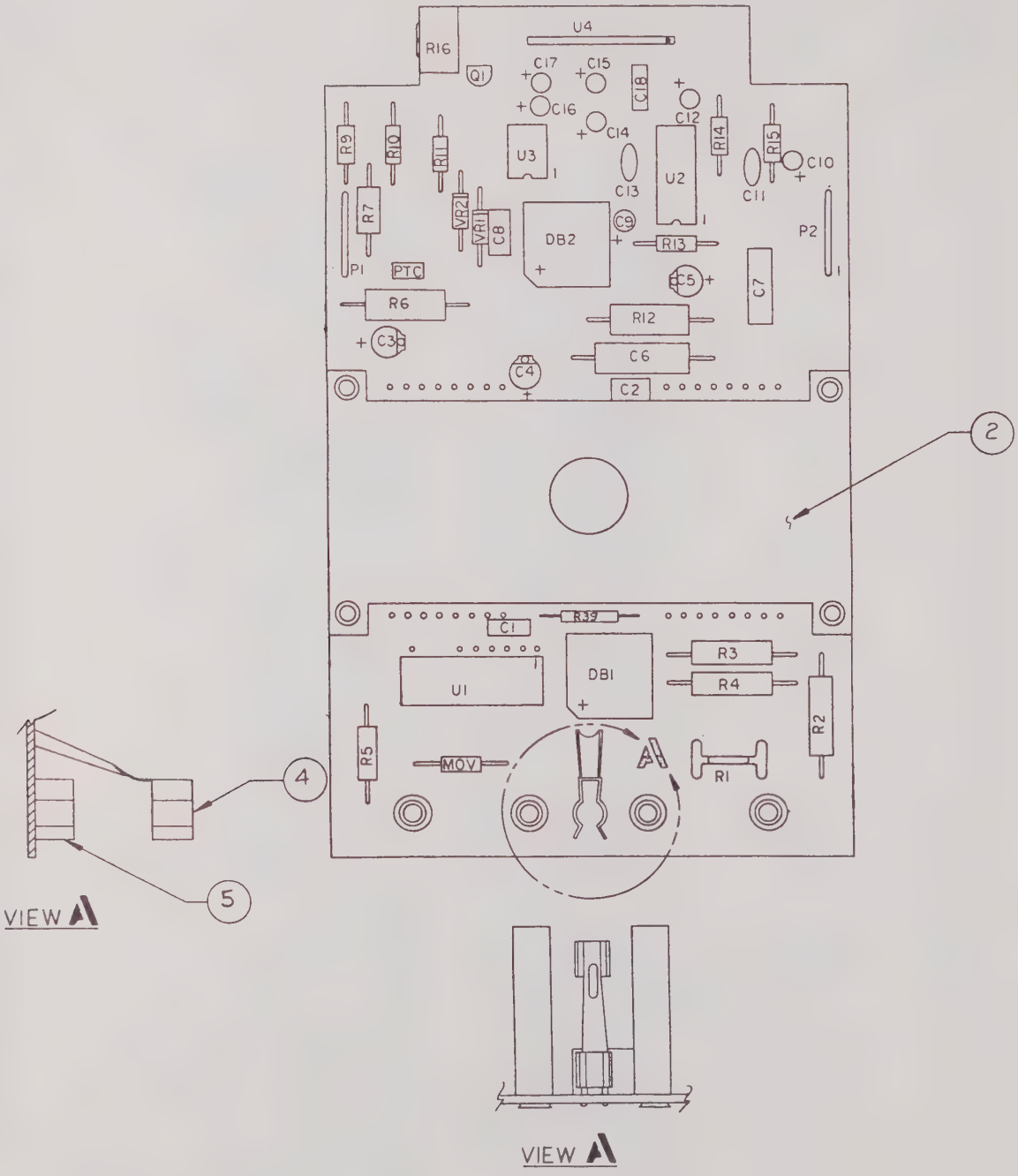

BECKMAN INDUSTRIAL CORPORATION
DIGITAL MULTIMETER SERVICE CENTERS--U.S./CANADA

Please note that all authorized service centers are NOT REQUIRED to abide by the factory flat fee policy. Please contact each center for estimates.

CALIFORNIA - SO.

Metermaster
5646 Jillson Street
Los Angeles, CA 90040
(213) 685-4340

Shafer Engineering
333 North Santa Anita, #7
Arcadia, CA 91006
(818) 795-5000

CALIFORNIA - NO.

Standard Meter Labs
11815 Dublin Boulevard
Dublin, CA 94568
(415) 828-4837

COLORADO

Beta Distributors
7076 South Alton Way, Building A
Englewood, CO 80112
(303) 779-3600

Instrument Repair Labs
1728 - 16th Street
Boulder, CO 80302
(303) 449-2721

D.H. Crump & Co.
6340 West Mississippi
Lakewood, CO 80226
(303) 936-4407

GEORGIA

Process Measurement Company
4509 Fulton Industrial, S.W.
Atlanta, GA 30336
(404) 696-7481

ILLINOIS

Metermaster
121 Gordon Street
Elk Grove Village, IL 60007
(312) 593-8650

INDIANA

Electro-Lab Services, Inc.
1302 North Fulton Avenue
Evansville, IN 47712
(812) 423-5211

LOUISIANA

Industrial Instrument Works, Inc.
5745 Salmen Avenue
Harahan, LA 70123
(504) 733-8355

MARYLAND

EIL Instruments, Inc.
10 Loveton Circle
Sparks, MD 21152
(301) 771-4800

MASSACHUSETTS

AST Servo Systems
20 Republic Road
North Billerica, MA 01862
(617) 667-8541

EIL Instruments, Inc.
21 "A" Street
Burlington, MA 01803
(617) 272-9450

MINNESOTA

Instrumentation Services, Inc.
957 Winnetka Avenue North
Minneapolis, MN 55427
(612) 544-8916

MISSOURI

Industrial Service Laboratories Corp.
4354 Olive Street
St. Louis, MO 63108
(314) 535-5760

NEW YORK

Electronic Instrument Co.
85 Avenue E
Rochester, NY 14621
(716) 544-4392

Trott Electronics
9020 Wehrle Drive
Clarence, NY 14031
(716) 634-8500

The Instrument Mart
295 Community Drive
Great Neck, NY 11021
(516) 487-7430

NORTH CAROLINA

Metermetrics
5821 North Boulevard
Raleigh, NC 27604
(919) 872-5456

OHIO

Unitek Instruments
5919 Karl Road
Columbus, OH 43229
(614) 885-6703

OKLAHOMA

Central Instrument Labs
4673 South 83rd East Avenue
Tulsa, OK 74145
(918) 622-1140

OREGON

Westcon, Inc.
5101 North Interstate Avenue
Portland, OR 97217
(503) 283-0132

PENNSYLVANIA

Sunshine Scientific Instruments
1810 Grant Avenue
Philadelphia, PA 19115
(215) 673-5600

TEXAS

Dallas Meter-Tek Supply
10209 Plano Road
Dallas, TX 75238
(214) 349-6044

EIL Instruments, Inc.
7385 Ashcroft Street
Houston, TX 77081
(713) 271-3100

Metermaster
2809 National Drive
Garland, TX 75041
(214) 271-5671

Meters & Instruments Corporation
6428 Gulf Freeway
Houston, TX 70023
(713) 644-1631

VIRGINIA

Instrument Technical Reps
7400 Whitepine Road
Richmond, VA 23227
(804) 275-1431

WASHINGTON

EIL Instruments
1312 South 96th Street
Seattle, WA 98108
(206) 762-0880

Digital Multimeters
Spare Parts Order Form

ALL ORDERS MUST BE PAID IN ADVANCE BY CHECK OR MONEY ORDER

PART NUMBER	DESCRIPTION	UNIT PRICE*	QUANTITY	CALIF TAX 6%	TOTAL

SHIP TO ADDRESS:
Please Print

_____

_____

_____

_____

*Prices in U.S. Dollars

SUBTOTAL _____

SHIPPING 1.50*

TOTAL _____

ALL MATERIAL WILL BE SHIPPED UPS OR AIR PARCEL POST.

Send order and remittance to:

BECKMAN INDUSTRIAL CORP.
630 PUENTE ST.
BREA, CA 92621
ATTN: CUSTOMER SERVICE

www.manualsplus.com
1020089